Wildcat

INDUSTRIES (Aust) P / L

Wildcat 8000 Pizza Oven

User Manual

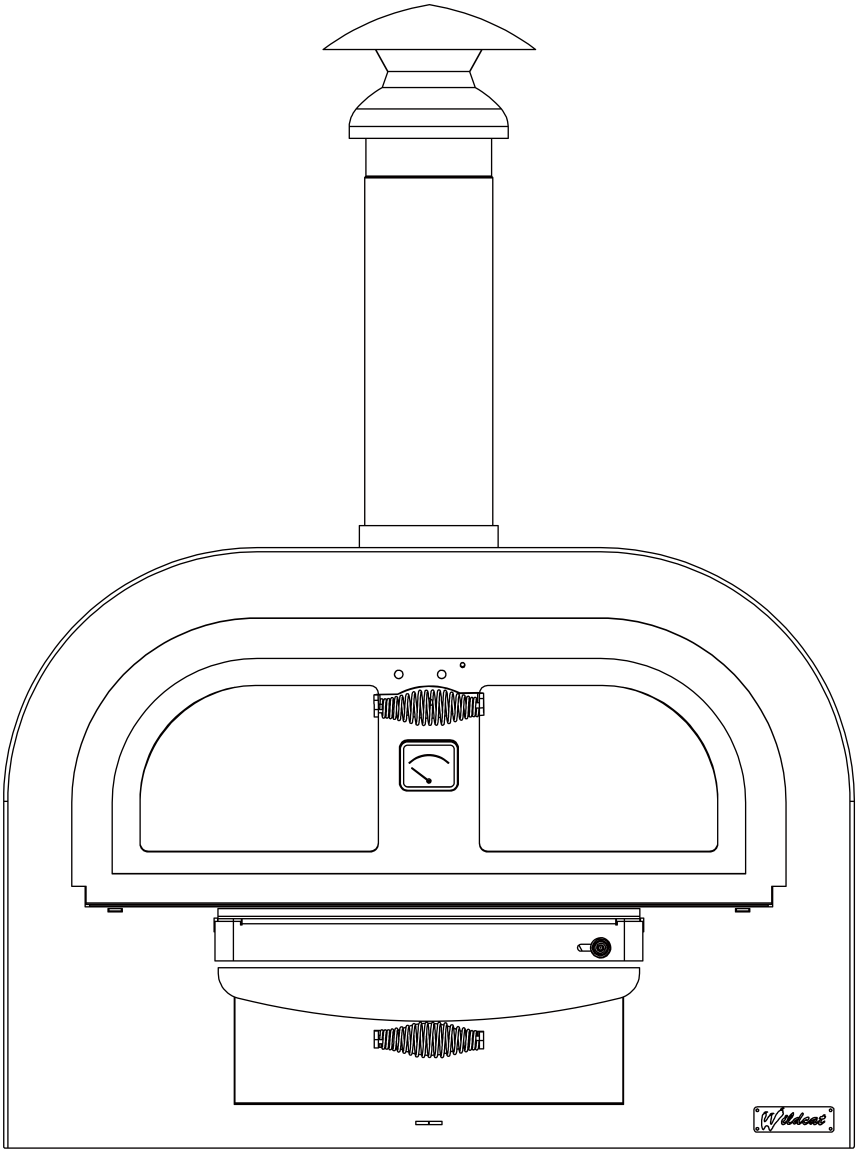

Ad: 35 Marconi Dr, Dandenong South, VIC 3175
Ph: (03) 97949956 **Fax:** (03) 86681677
E-mail: sales@wildcatindustries.com.au

Wildcat INDUSTRIES (Aust) P / L

Contents

Product Dimensions Page.03

Assembly Page.04

Assembly Firebricks Page.05

First Firing Instructions Page.06

Smoking Your Food Page.07

Maintenance & Safe Operation Page.08

Contact Information Page.09

Accessories & Other Products Page.10

Ad: 35 Marconi Dr, Dandenong South, VIC 3175
Ph: (03) 97949956 **Fax:** (03) 86681677
E-mail: sales@wildcatindustries.com.au

Product Dimensions

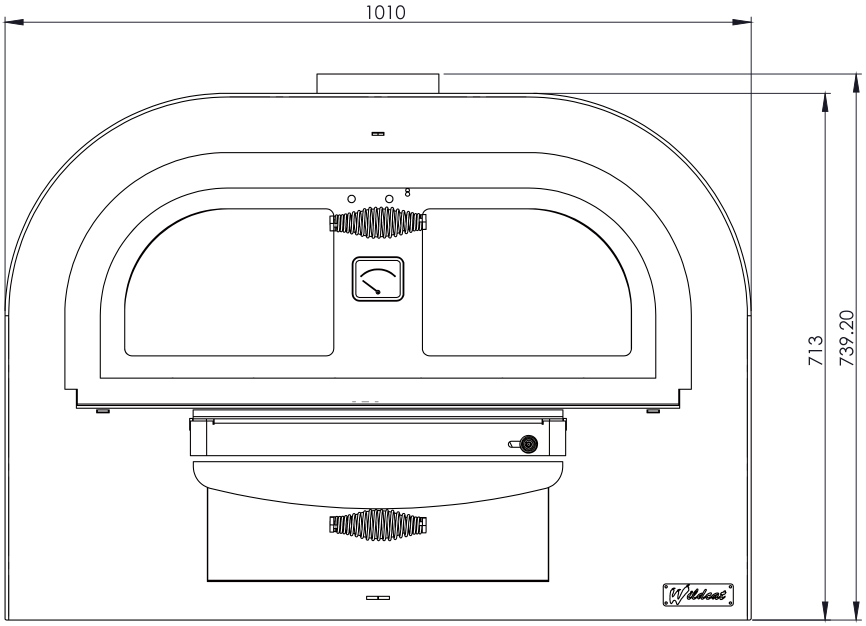

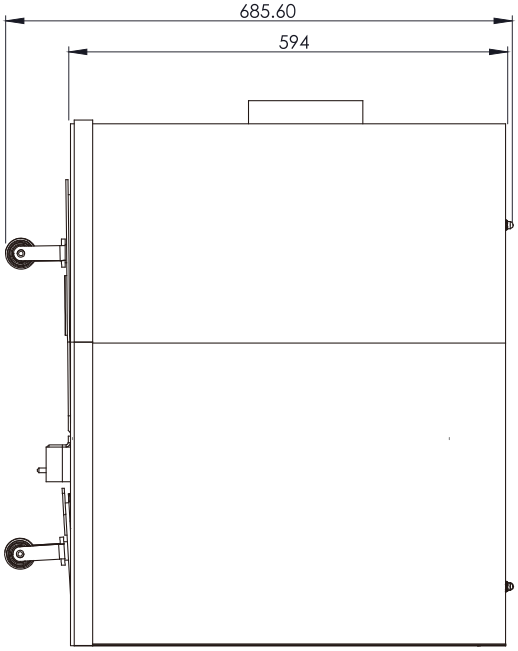

Overrall Dimensions 590mm Deep x 1010mm Wide x 740mm High x 145kg Weight

Oven Dimensions 500mm Deep x 810mm Wide x 280mm High

Firebox Dimensions 500mm Deep x 460mm Wide x 180mm High

*2 x 450mm length of stainless steel flue pipe and a stainless steel cowl is provided with the oven.

Ad: 35 Marconi Dr, Dandenong South, VIC 3175
Ph: (03) 97949956 **Fax:** (03) 86681677
E-mail: sales@wildcatindustries.com.au

Assembly

(1) Remove the outer packaging taking care not to damage the surface of the oven with box cutters or other sharp implements.
Minor scratches can be buffed out of the stainless steel surface with an abrasive brillo pad or similar, while painted surfaces can be touched up at any time with an aerosol touch up spray available from Wildcat.

(2) At this stage you will see other parts inside the oven, leave these for now, they can be easily removed once the oven is lifted off the pallet.

(3) Remove the pallet screws from the front and back of the oven, (hex head)

(4) Lift the oven off the pallet (two people required to lift the oven comfortably) and set aside.

(5) Prepare the area where the oven is to be placed. The Wildcat wood fired outdoor oven can be installed several ways. It can be mounted on a portable Wildcat heavy duty trolley. It can be mounted on a fixed steel framed stand (with leveling feet) which Wildcat manufacture, or it can be built in to a new or existing outdoor kitchen or entertaining area. The Wildcat oven has been approved for through roof flue installation and can be installed as close as 50mm to combustibles at the rear, and 300mm on the sides.

(6) If the oven is to be fitted onto the optional Wildcat 8000 Series oven trolley, then the trolley should be assembled and levelled prior to fitting the oven.

Ad: 35 Marconi Dr, Dandenong South, VIC 3175
Ph: (03) 97949956 **Fax:** (03) 86681677
E-mail: sales@wildcatindustries.com.au

Assembly Firebricks

(7) After checking that the oven is level and square, it's time to fit the firebricks. Using the pattern below as a guide, start by standing up the verticalside bricks.

You may have to shuffle the bricks around a little to get the flattest possible surface. Firebricks are fired in a kild and some variation is to be expected.

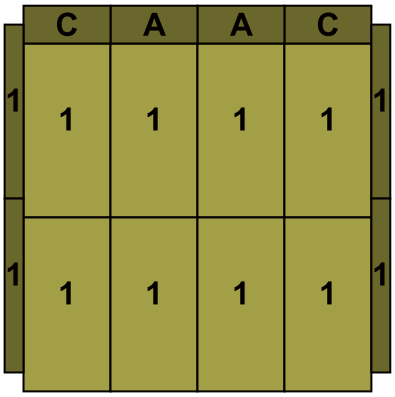

Pictured left is the layout for firebricks in the firebox which is under the oven.
There is a vertical steel plate about 3/4 of the way back into the box. Fit the vertical side bricks on both sides first. Push all the way back to the rear wall. Next fit the bricks up against the vertical steel plate, then fit the six horizontal bricks.
Note: The four horizontal bricks can go either side to side or front to back, it is not important which way they go.

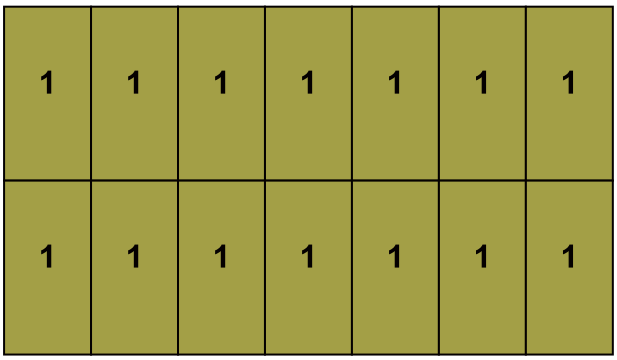

The oven bricks are layed out as shown at left.

TYPE	DIMENSIONS	QTY
1	230 x 115 x 25	28
A	230 x 115 x 50	2
C	160 x 115 x 50	2

(8) Finally, remove the protection film on the stainless surface carefully, fit the flue pipe and cowl, and you are ready for the first firing.

Ad: 35 Marconi Dr, Dandenong South, VIC 3175
Ph: (03) 97949956 **Fax:** (03) 86681677
E-mail: sales@wildcatindustries.com.au

First Firing Instructions

To get you started, 'first firing' is required so you cure your oven perfectly. This will cures the paintwork, burns off any oil residue on the metal and get rid of anywelding contaminants.

- Start with a small amount of dry kindling (pine is fine) and newspaper or firelighters. **DON'T OVER DO IT!** We know it's tempting and you just want to cook now, but just a small amount will do. When the fire has taken off add a few small pieces of dry hardwood, like red gum, no thicker than your wrist. Close the firebox door.

- Ideally your temperature will get no hotter than 200C. (Read the temperature gauge inside the oven) Let this burn for 2 hours.

- Only add more wood when your fire has burnt to coals. Coals enable you to keep a more even temperature.

- Cool the oven overnight if possible or for a few hours and now you're ready to cook.

Note: Your Wildcat Wood Fired Pizza Oven will only take approximately 1 hour to reach cooking temperature.

Ad: 35 Marconi Dr, Dandenong South, VIC 3175
Ph: (03) 97949956 **Fax:** (03) 86681677
E-mail: sales@wildcatindustries.com.au

Smoking Your Food

- The Wildcat 8000 oven give you the choice of adding or removing smoke to your cooking, making it a very versatile appliance. Simply open the adjustable vents on both sides of the oven to add smoke.
- Use this cooking method for eoasts, breads, pizzas, vegetables or fish. If you add flavoured woodchips/sawdust to your firebox you also add another flavoursome element to your cooking.
- Soak the chips/sawdust and place to the side of the coals for a delicious aroma. Close the vents for cooking scones, buns, cakes & desserts. This method ensure the food is not tainted by the smoke.
- If you want to cook a dessert straight after you have smoked food, close the smoking vents and open the top baffle for a few minutes to clear the smoke smell first.
- The Wildcat oven has an adjustable baffle plate inside the ceiling of the oven. This allows for manual temperature & smoke control. The plate easily slides back to open & forward to close.
- If the temperature in your oven is too high for the food you are cooking simply open the baffle plate to release some of the hot air. When you have reduced the temperature close the baffle again.
- Fitted to the front of the Wildcat oven is an airwash. This is used to control the amount of air getting into the firebox. A fire requires air & fuel (wood) to burn. The amount of air regulates how fast the wood will burn.
- The airwash when open allows preheated air to enter the firebox via vents attached to a channel in between the firebox and the front of the oven. This feeds the fire & make it burn faster. This is good for getting the fire started and when adding more wood to the fire.
- Closing the airwash reduces the amount of available air therefore reducing the speed at which the wood burns. This is best when your temperature has been reached and you have good hot coals burning.

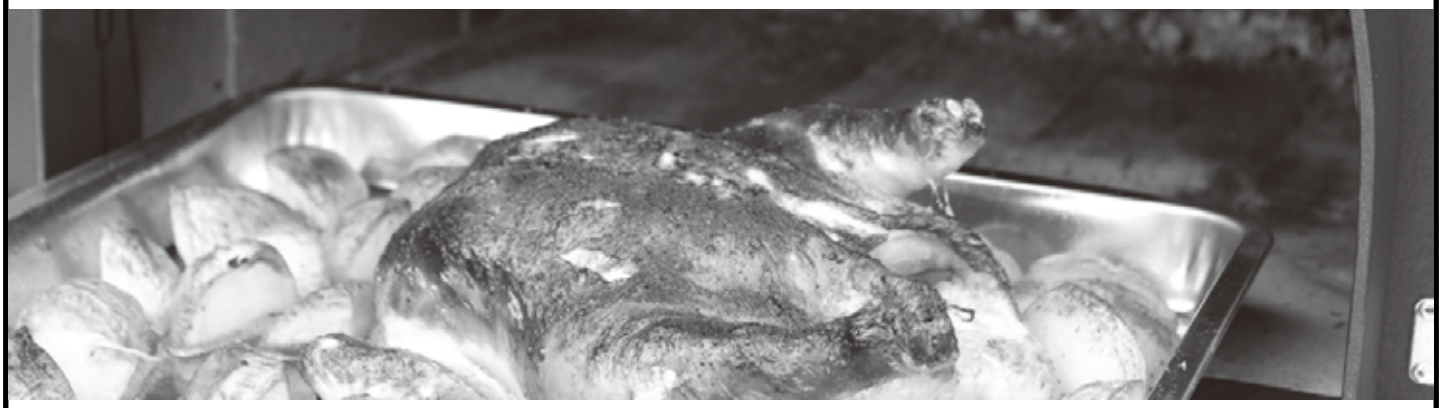

Ad: 35 Marconi Dr, Dandenong South, VIC 3175
Ph: (03) 97949956 **Fax:** (03) 86681677
E-mail: sales@wildcatindustries.com.au

Maintenance & Safe Operation

The heavy duty powder coated finish on your Wildcat trolley should require no more than the occasional wipe with a damp cloth to keep it looking good. Heavier food stains can be safely removed with a non abrasive proprietry household cleaner. Occasionaly it may be necessary to re-tighten the screws.

SAFETY WARNING:

With a Wildcat Pizza Oven fitted, the oven/trolley combination is very heavy and will require a minimum of 2 adults to move it safely on flat smooth surfaces only.

- ***Do not*** attempt to move the oven/trolley combination on uneven ground.
- ***Never*** attempt to move the oven/trolley whilst there is an active fire in the oven, or while hot.
- Ensure all castors are locked before using the oven.
- ***Do not*** operate the oven on uneven or sloping ground.

Don't forget to check our interactive website for lots of recipes, tips and tricks and cooking video demonstrations. Members can also share their own recipes wih other satisfied Wildcat Woodfired Oven owners at

http://www.mypizzaoven.com.au

We take this opportunity to thank you for your purchase and trust that you and your family will enjoy many hours of outdoor gourmet cooking!

Ad: 35 Marconi Dr, Dandenong South, VIC 3175
Ph: (03) 97949956 **Fax:** (03) 86681677
E-mail: sales@wildcatindustries.com.au

Contact Infomation

Wildcat Industries maintains a comprehensive web site for customer convenience. For service or general enquiries please try our website first, or for further assistance contact Wildcat Industries.

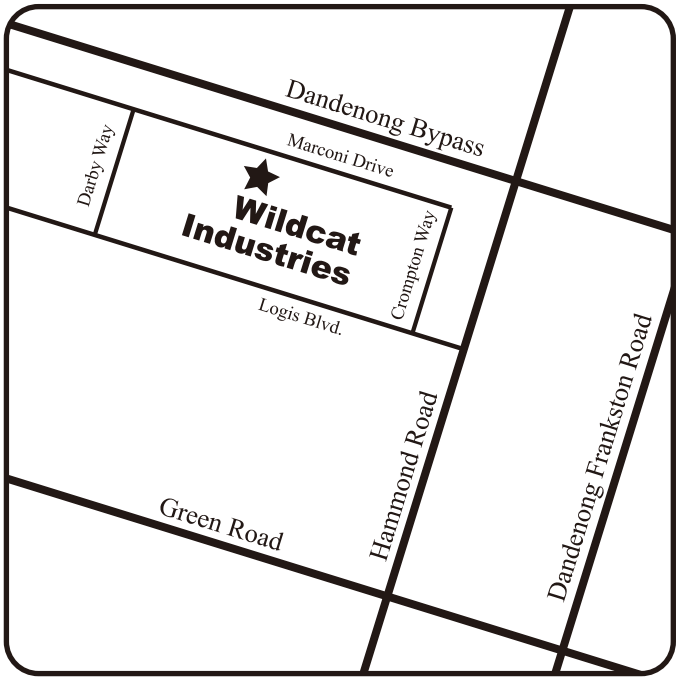

Ad: 35 Marconi Drive, Dandenong South, VIC 3175
Ph: (03) 9794 9956 **FAX:** (03) 8668 1677
E-mail: sales@wildcatindustries.com.au
http://www.mypizzaoven.com.au
http://www.wildcatindustries.com.au

Due to Wildcat Industries (Aust) Pty. Ltd. ongoing commitment to product quality and improvement we reserve the right to alter products and/or specifications without notice.

© Copyright 2015 Wildcat Industries (Aust) Pty. Ltd.

Ad: 35 Marconi Dr, Dandenong South, VIC 3175
Ph: (03) 97949956 **Fax:** (03) 86681677
E-mail: sales@wildcatindustries.com.au

Accessories & Other Products

Wildcat Industries are constantly striving to improve our existing range and develop new and innovative products. Here are just a few!

Wild Pizza Oven Cover

Pizza Peel-stainless steel with a solid timber handle

Trolley for Wildcat 6000 Pizza Oven

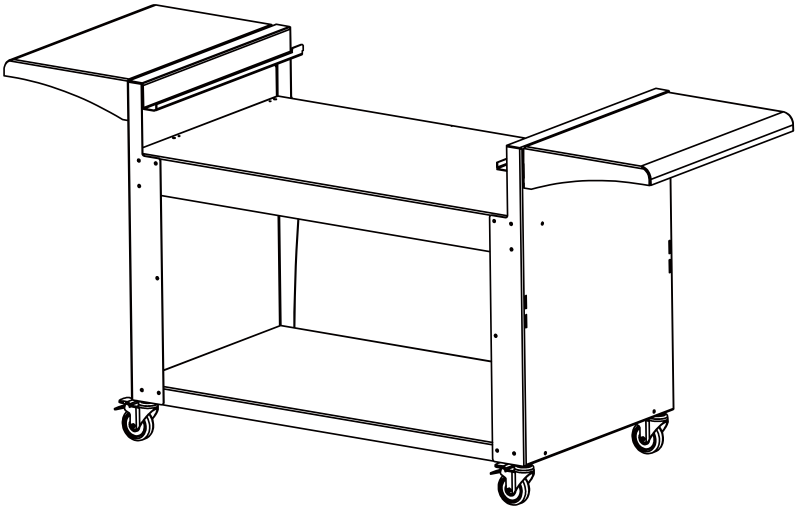

Pizza Trays

Ad: 35 Marconi Dr, Dandenong South, VIC 3175
Ph: (03) 97949956 **Fax:** (03) 86681677
E-mail: sales@wildcatindustries.com.au